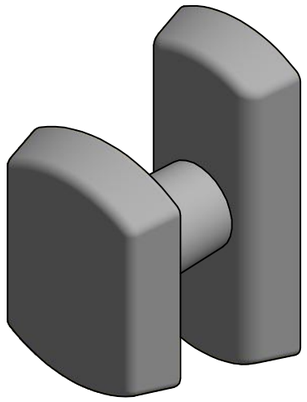

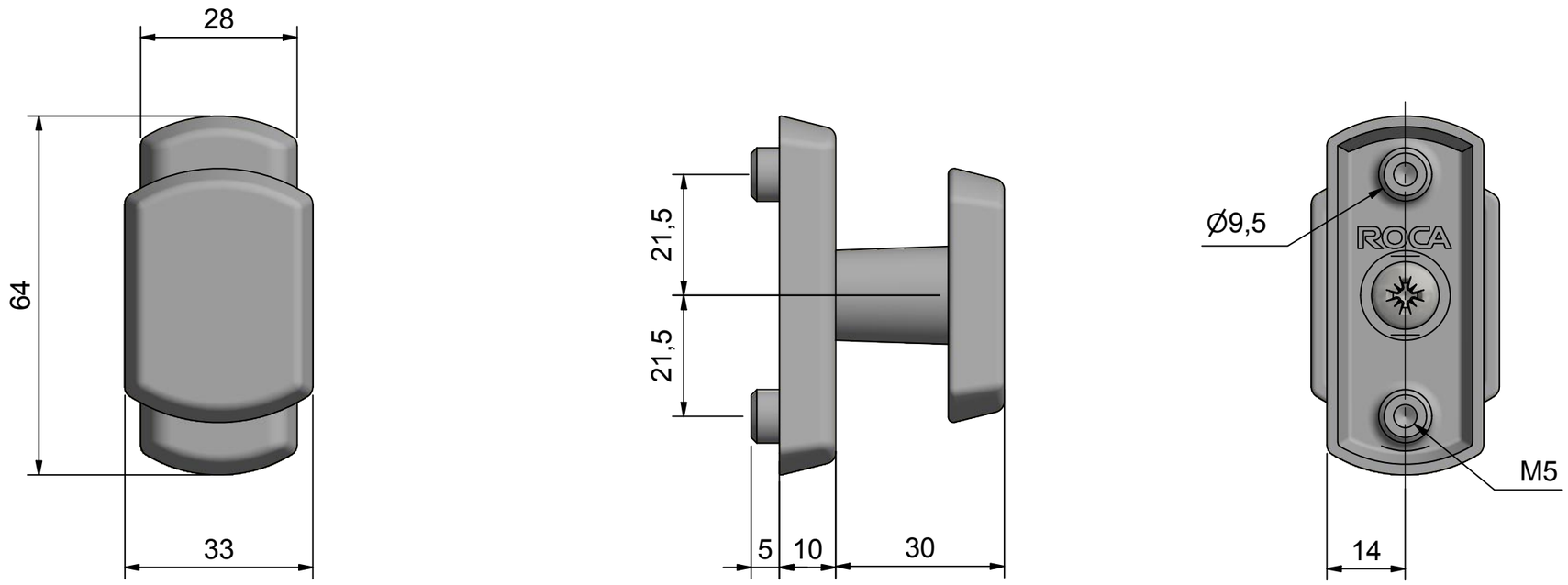

Zamac/Satin nickel plated	Date 191118/HH
Description **Cover plate w. pull knob WH-32**	Item no. **932781**