Reference 46031x | A3

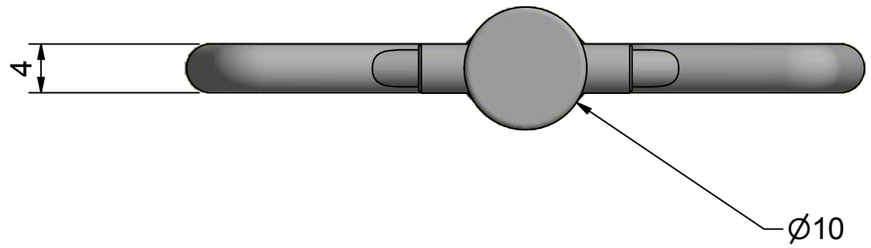

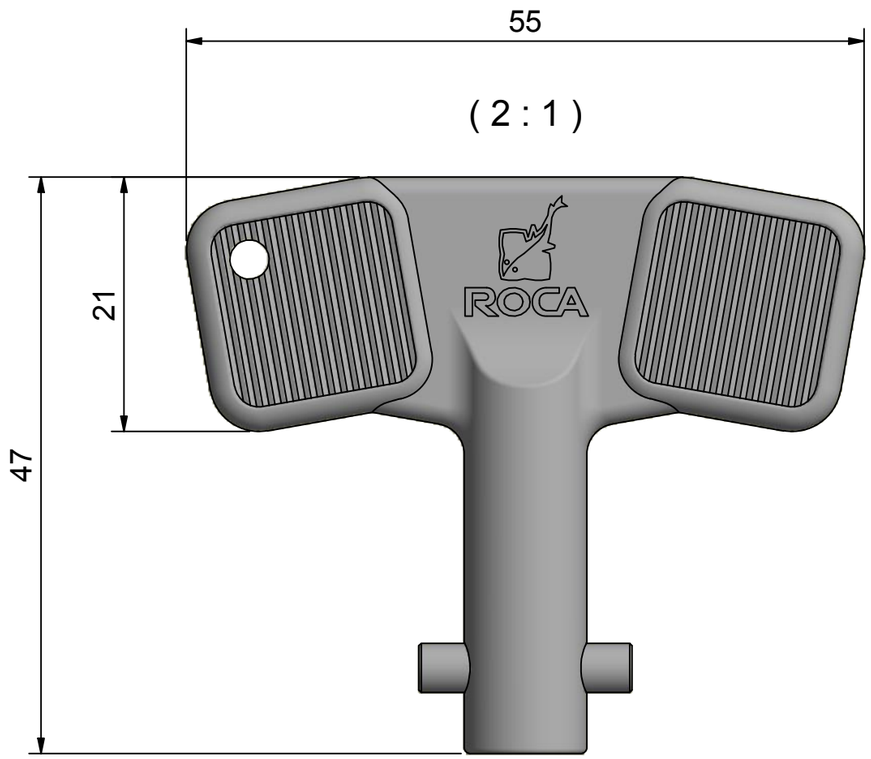

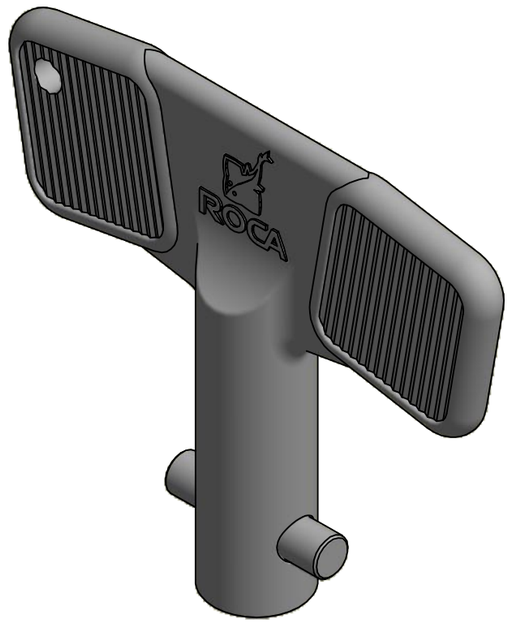

PA/green	Date 190925/HH
Description **Extra key for 460234/5**	Item no. **460311**