Reference 46031x | A3

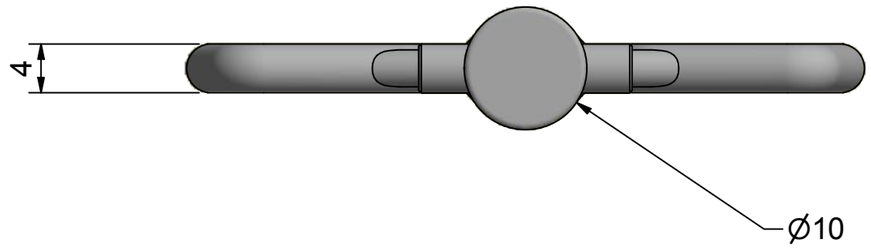

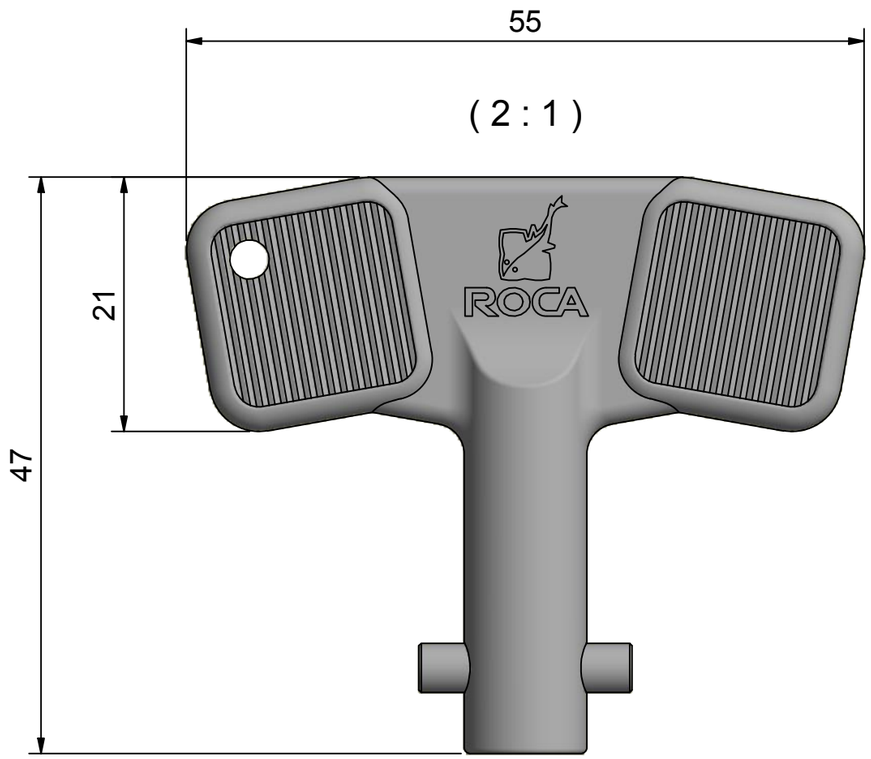

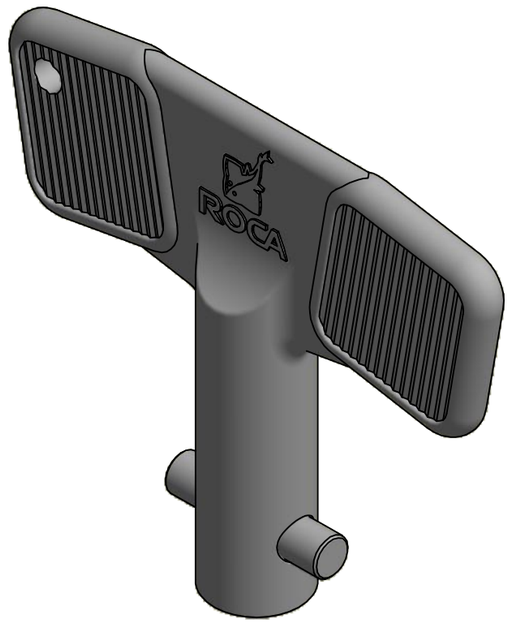

PA/black	Date 190925/HH
Description **Extra key for 460232,460233**	Item no. **460310**