Referense 422011 | A3

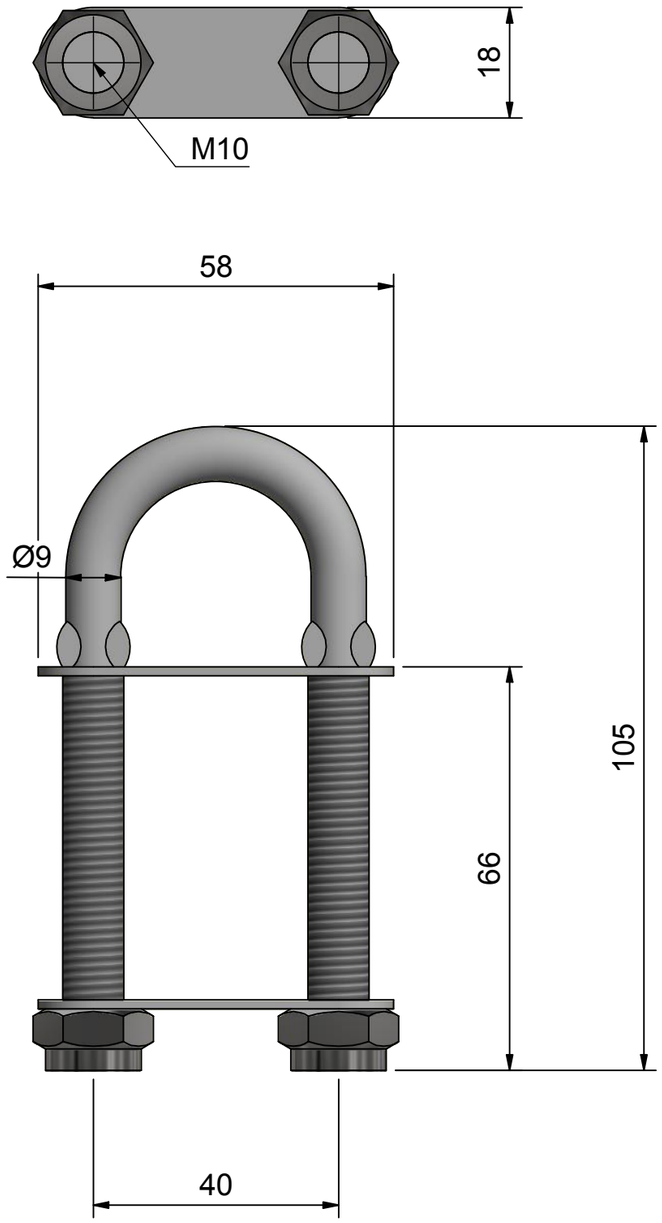

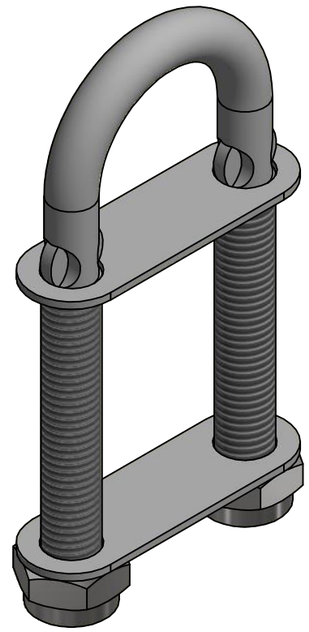

AISI304/Electro polished	Date 190912/HH
Description **Bow eye - standard 105x40**	Item no. **422011**